mm [inch]

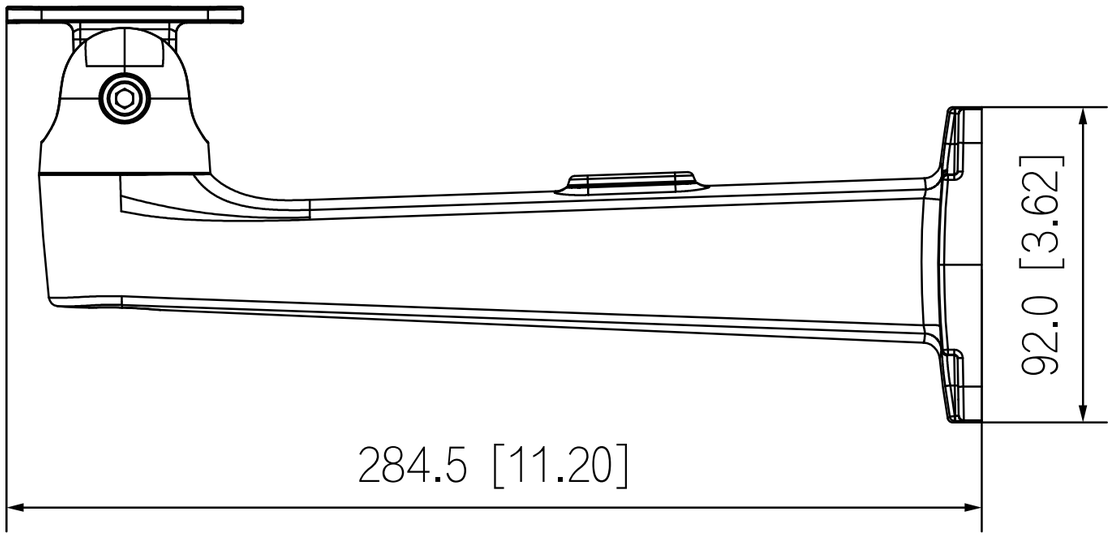
92.0 [3.62]
284.5 [11.20]

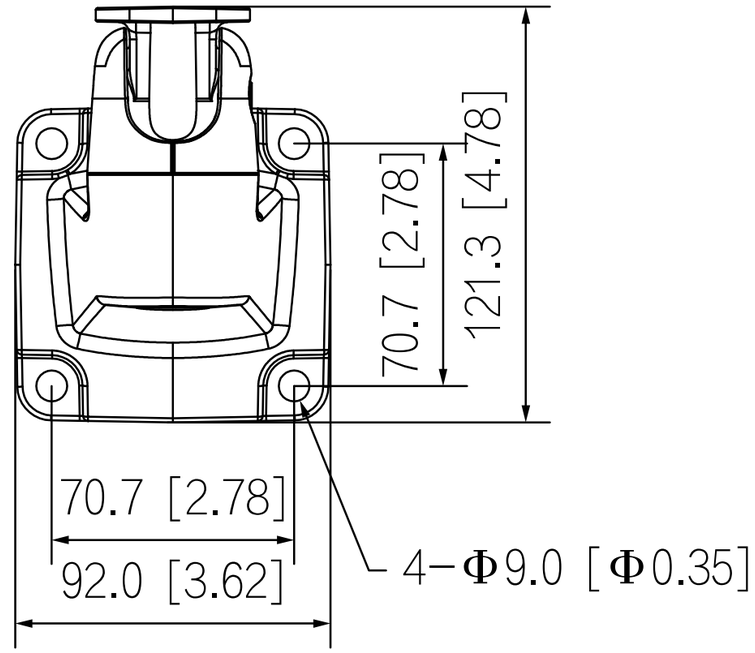
121.3 [4.78]
70.7 [2.78]
70.7 [2.78]
92.0 [3.62]
4−Φ9.0 [Φ0.35]

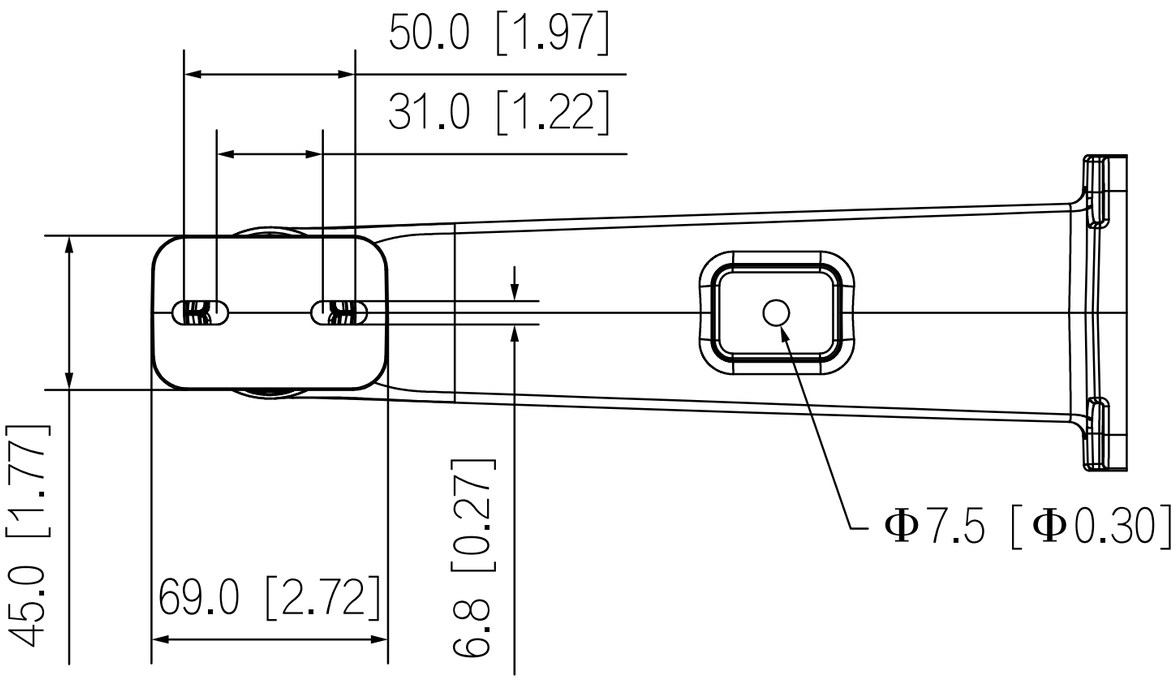
50.0 [1.97]
31.0 [1.22]
45.0 [1.77]
69.0 [2.72]
6.8 [0.27]
Φ7.5 [Φ0.30]