DH-CS4220-16GT

20-Port Cloud Managed Desktop Gigabit Switch

- 18 × RJ45 Gigabit ports, 2 × SFP Gigabit ports.
- Wide operating temperature ranging from –10 °C to 55 °C.
- Supports VLAN, STP, RSTP and link aggregation.
- WEB-managed and centralized cloud management through the DoLynk App and performs real-time monitoring of the network.
- Easy config to auto detect and set up network.

Series Overview

Highly intuitive, the Switch can manage local networks. With its full metal design, the switch has great heat dissipation and can operate in temperatures ranging -10°C to 55°C(+14°F to +131°F). It offers EMC and has protection against overvoltage, overcurrent, static electricity, lightning strikes, pulses and other types of interference. Also, link aggregation and STP are available on select models to ensure the network remains stable. The switch can be used in small and medium-sized businesses such as supermarkets, offices, restaurants, cafés and hotels.

Functions

Network Topology Management
Supports the LLDP protocol and is able to generate and display the network topology, so that you can quickly identify issues, and perform operation and maintenance remotely on devices that are in the topology.

Link Aggregation
Combines multiple physical links into one virtual channel for dynamic redundancy and load balancing, ensuring that the connection remains stable.

All-Gigabit Ports
Designed with large buffer memory and all-Gigabit ports, enabling high-definition access of large stream.

Spanning Tree Protocol (STP)
Uses algorithms that calculate the best loop-free path through a Layer 2 network while providing path redundancy to prevent the occurrence of broadcast storms and enhance the stability of operations and services.

Fanless Design
The fanless design reduces noise, enhances user experience, reduces mechanical losses and improves service life to a certain extent.

Cloud Management
Devices can be managed through the DoLynk Care app and performs real-time monitoring of the network. The app also displays the status of devices, triggers alarms for errors in real time and sends notifications.

Scene

Suitable for scenes such as houses, factories and offices.

Technical Specification

Basic

Layer	Layer 2
Switching Capacity	40 Gbps
Packet Forwarding Rate	29.76 Mpps
Description of Function Slots	Port 1-16: 16 × RJ45 10/100/1000 Mbps； Port 17-18: 2 × RJ45 10/100/1000 Mbps (uplink); Port 19-20: 2 × SFP 1000 Mbps (uplink)
Operating Temperature	–10 °C to +55 °C (+14 °F to +131 °F)
Operating Humidity	5%–95% (RH), non-condensing
Storage Temperature	–40 °C to +70 °C (–40 °F to +158 °F)
Storage Humidity	5%–95% (RH), non-condensing
Power Supply	Built–in power supply: 100–240 VAC, 50/60 Hz, max 1.0A
Power Consumption	Idling: 4 W Full load: 14.4 W
Statics Protection	Air discharge: 8 kV; Contact discharge: 6 kV
Lightning Protection	Common mode: 4 kV Differential mode: 2 kV
Net Weight	1.65 kg (3.64 lb)
Gross Weight	2.5 kg (5.51 lb)
Product Dimensions	440 mm × 164 mm × 44 mm (17.32" × 6.45" × 1.73") (L × W × H)
Packaging Dimensions	540 mm × 342 mm × 90 mm (21.26" × 13.46" × 3.54") (L × W × H)
Casing Material	Sheet metal
Installation	Desktop mount; rack mount

PoE

PoE	No

Hardware

Reset Button	1

Performance

MTBF	86.94 years
Packet Buffer Size	4 Mbit
Jumbo Frame	15K Byte
MAC Table Size	8K
Communication Standard	IEEE 802.3 IEEE 802.3u IEEE 802.3x IEEE 802.3ab IEEE 802.3az IEEE 802.3z IEEE 802.3ad
VLAN Number	32

Feature

VLAN Function	IEEE 802.1Q VLAN
Link Aggregation	Static Aggregation
Port Feature	IEEE 802.3x Flow Control Unknown Unicast Suppression Multicast Storm Control Broadcast Storm Control MAC+Port Binding Loop Prevention
Mirror	N:1 Mirroring Local Port Mirroring
Reliability	LLDP
DHCP Function	DHCP Client
Security	Port Isolation
Equipment Management	Web Management Cloud Management Logs Fault Alarm

General

Packing List	1 × Quick Start Guide 1 × Legal and Regulatory Information 1 × Power Cord 1 × Rack-mounting Kit

Ordering Information

Type	Model	Description
Ethernet Switch	DH-CS4220-16GT	20-Port Cloud Managed Desktop Gigabit Switch

Installation

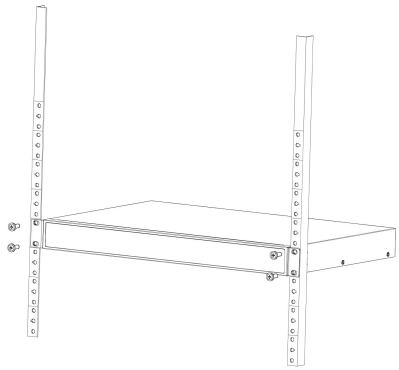

Dimensions (mm[inch])

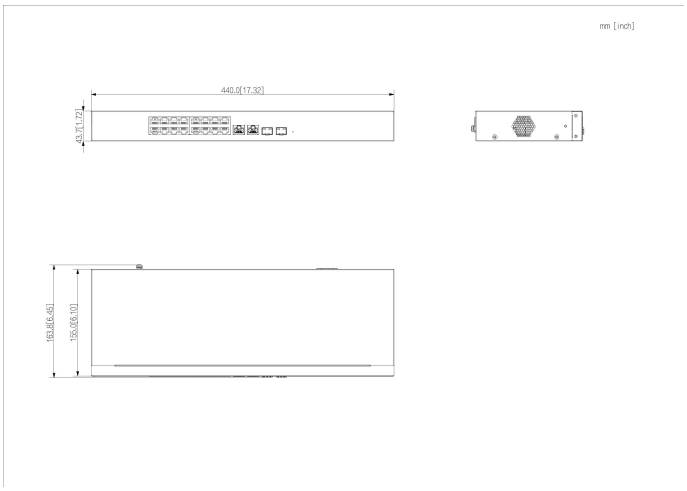

Panels

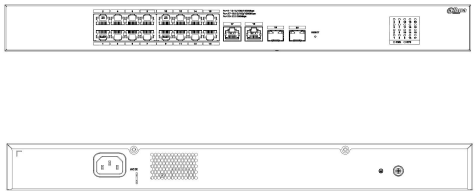

Rev 002.000 © 2025 Dahua. All rights reserved. Design and specificatons are subject to change without notce.
Pictures in the document are for reference only, and the actual product shall prevail.