mm [inch]

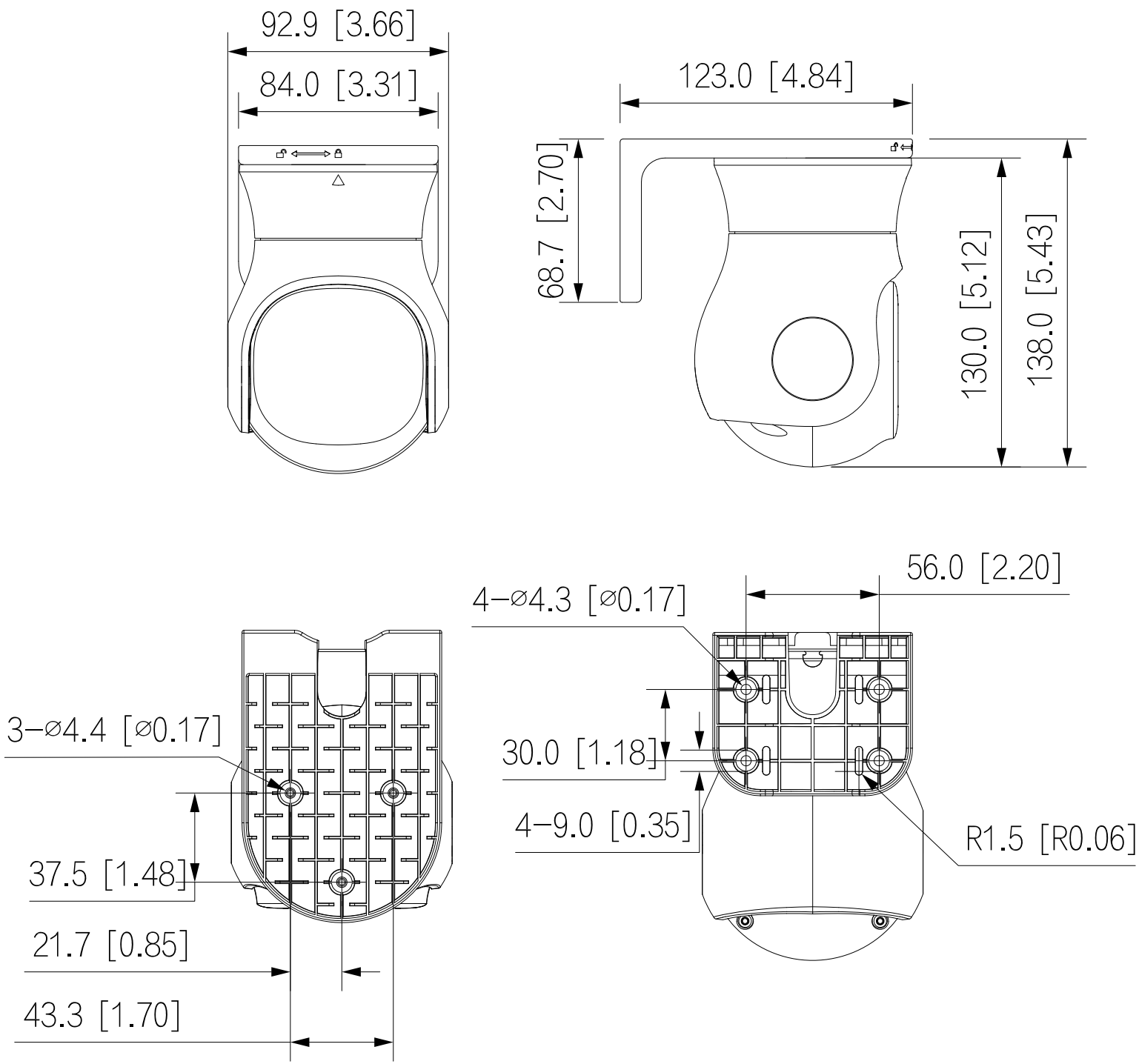
92.9 [3.66]
84.0 [3.31]
123.0 [4.84]
68.7 [2.70]
130.0 [5.12]
138.0 [5.43]
56.0 [2.20]
4−⌀4.3 [⌀0.17]
3−⌀4.4 [⌀0.17]
30.0 [1.18]
4−9.0 [0.35]
R1.5 [R0.06]
37.5 [1.48]
21.7 [0.85]
43.3 [1.70]